Nanoelectronics Laboratory
University of Alberta

Impact of Tube Pitch on the RF Performance of Array-Based, Carbon-Nanotube Transistors

Navid Paydavosi,* Kyle Holland,* Mani Vaidyanathan
University of Alberta, Canada
IWCE 2010

*These authors contributed equally to this work.

Motivation I

- The array-based, carbon-nanotube, field-effect transistor (CNFET)

is one of the candidates under consideration for high-frequency (RF) applications.

- Today's measured values of cutoff frequency (f_T) remain low.
- Decreasing the distance between the tubes (i.e., the pitch) can help [Rutherglen et al., Nano Nature, 2009].

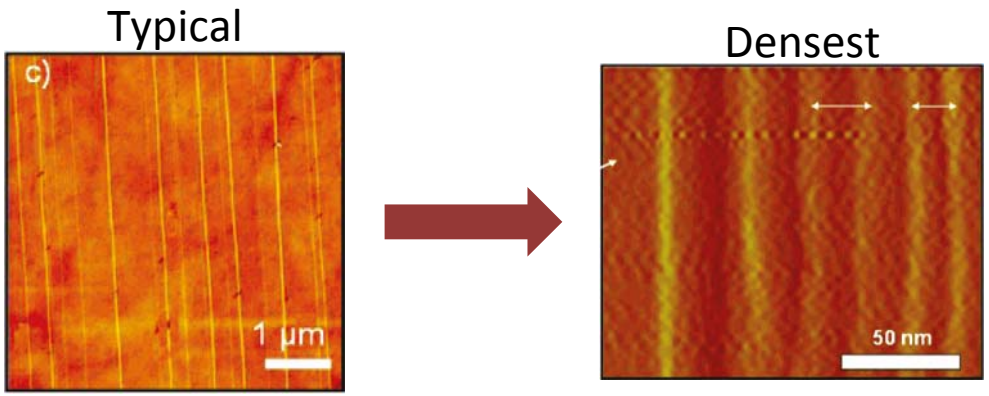

Taken directly from [Kocabas et al., The Journal of Physical Chemistry C, 2007].

Motivation II

- Screening effect
  - Screening of the gate electric field due to the charge on neighboring tubes.
- Conflicting views in the literature on screening effect:
  - Rutherglen et al. [Nano Nature, 2009] suggest that the screening in dense arrays does not impact the f_T.
  - Kshirsagar et al. [DAC, June 8, 2008]suggest that the screening may improve the f_T.

Structure

Array-Based, MOSFET-like CNFET

- Case I: Gate oxide covers the entire device.
- Case II: Gate oxide covers only the channel.

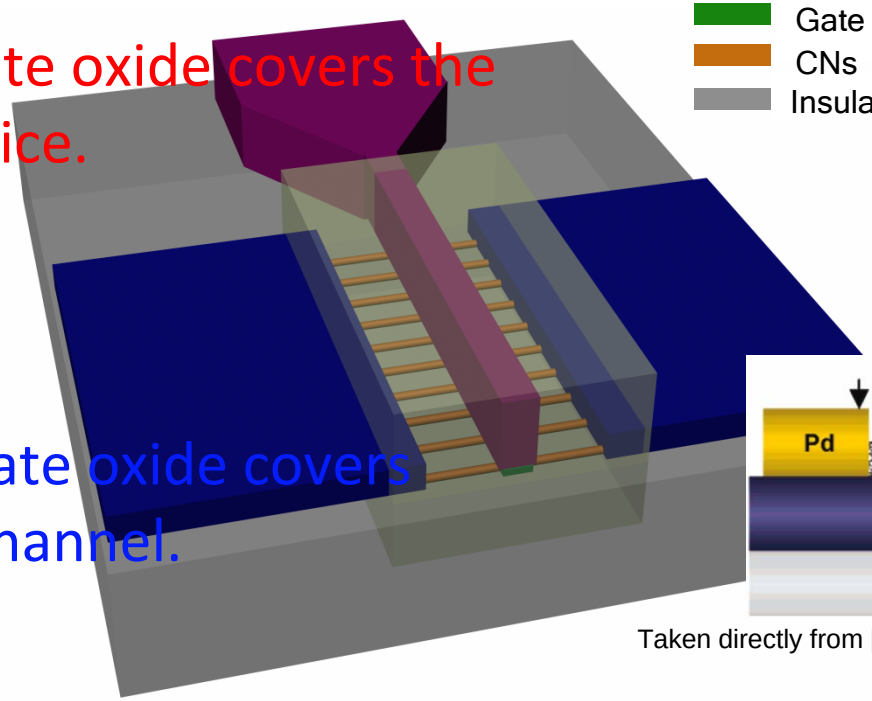

Experimentally fabricated prototypes:

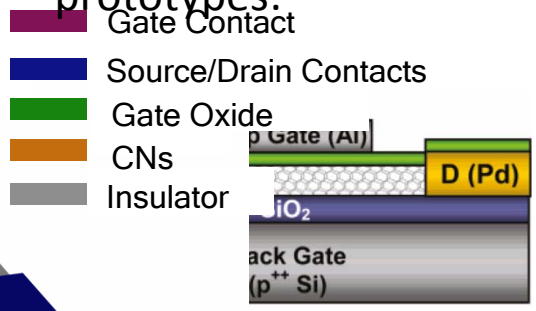

ey et al., Nano Letters,

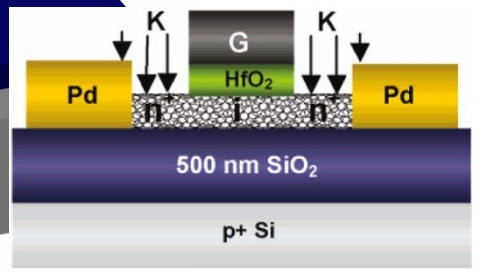

Taken directly from [Javey et al., Nano Letters, 2005].

Gate-contact metal: $W_G \times L_G \times H_G$ of 300 nm × 20 nm × 50 nm
Source/drain-contact metals: $W_{S/D} \times L_{S/D} \times H_{S/D}$ of 300 nm × 20 nm × 20 nm

Methodology I

- Implemented Custom NEGF-Poisson Solver
  - One system of NEGF equations for each CNT
  - NEGF solved in mode-space basis
  - 3D Poisson equation includes all tubes in simulation domain

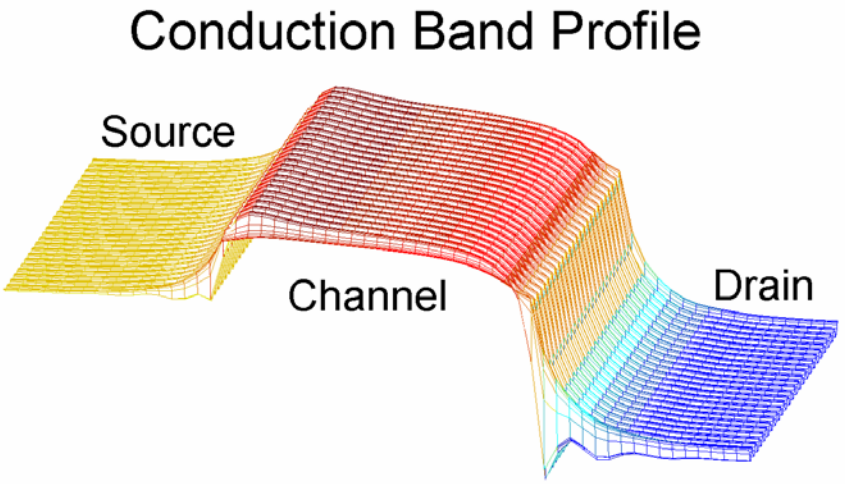

Methodology II

- COMSOL MultiPhysics is used to find the parasitic capacitances of an open structure.

Electrostatic Potential [V]

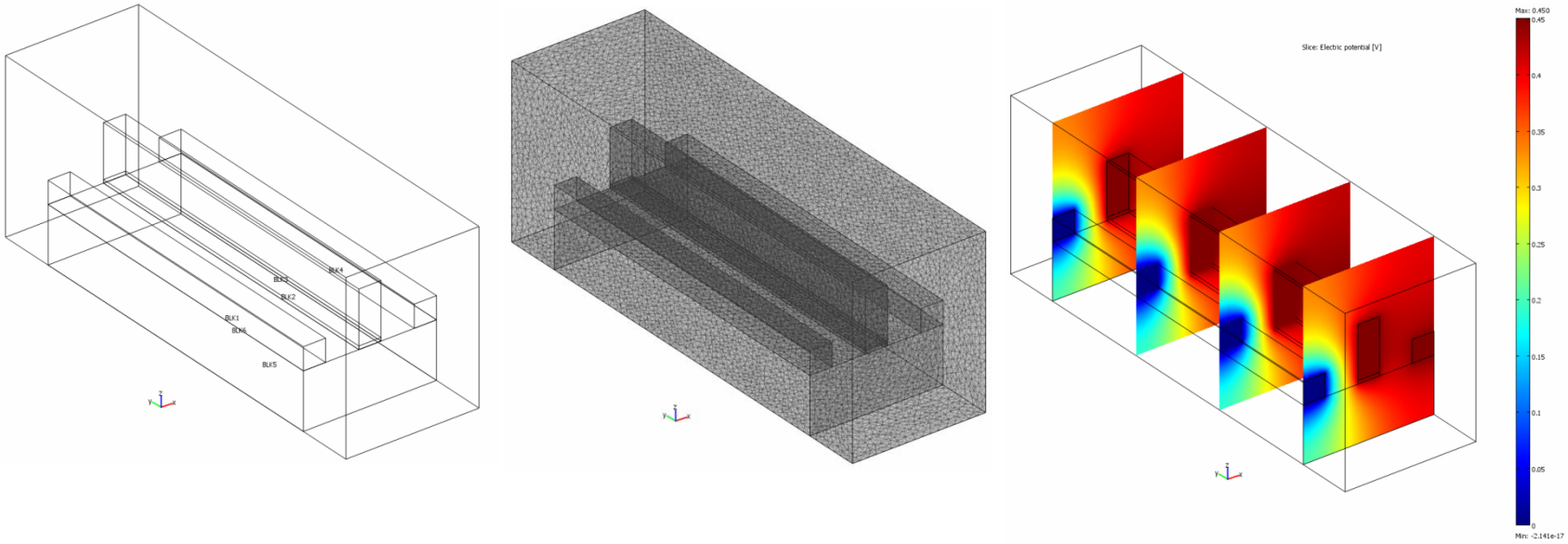

Methodology III

1. Steady-state, NEGF simulations are used to extract intrinsic circuit elements.
2. COMSOL is used to find extrinsic circuit elements.
3. The circuit is used to calculate the overall y-parameters, h_{21}, and extrinsic f_T.

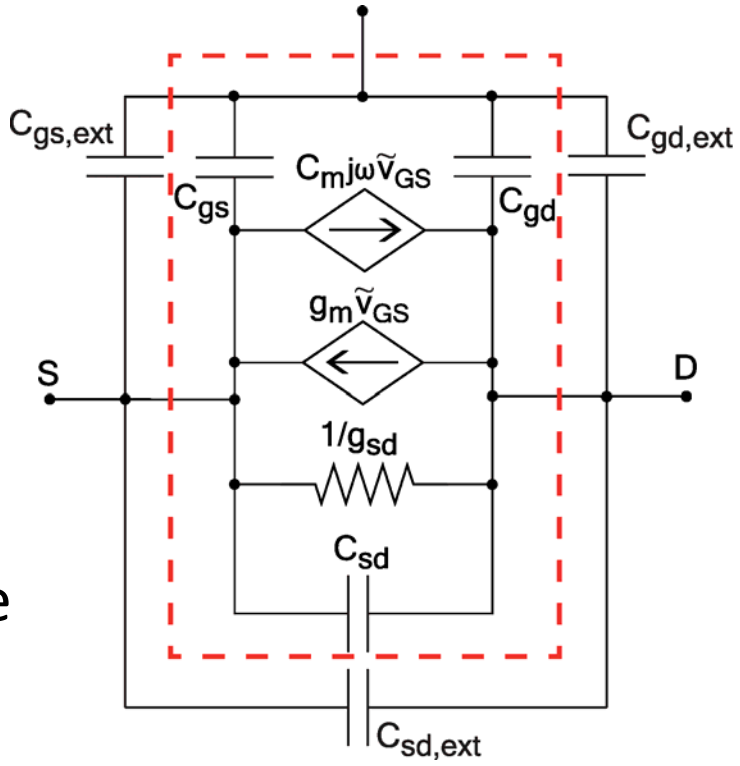

Intrinsic Results I

- Point 1: The screening effect improves intrinsic f_T.

Small Gate Oxide (Case II)

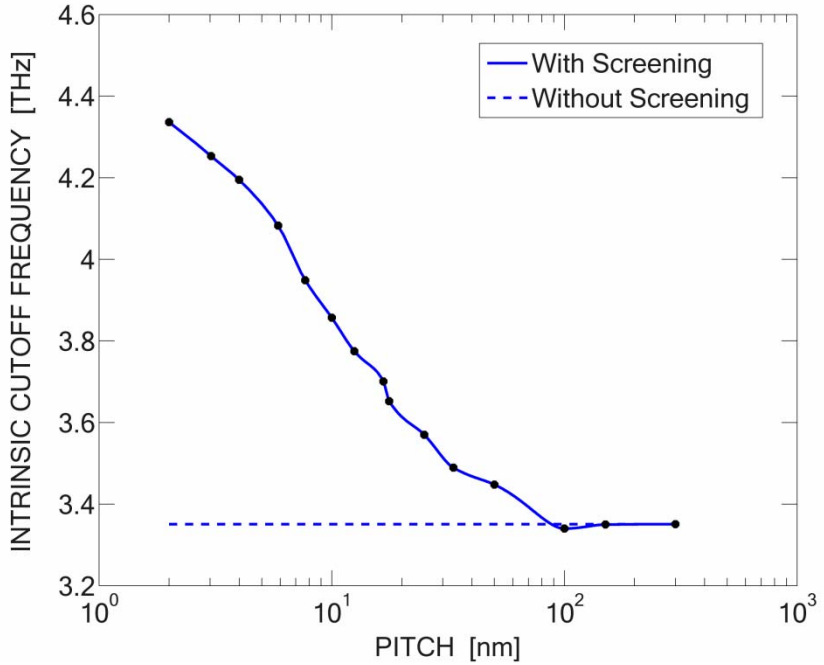

Screening is good!

Intrinsic Results II

- Reason: The reduction in the value of C_{gg} due to screening is much faster than the reduction in g_m.

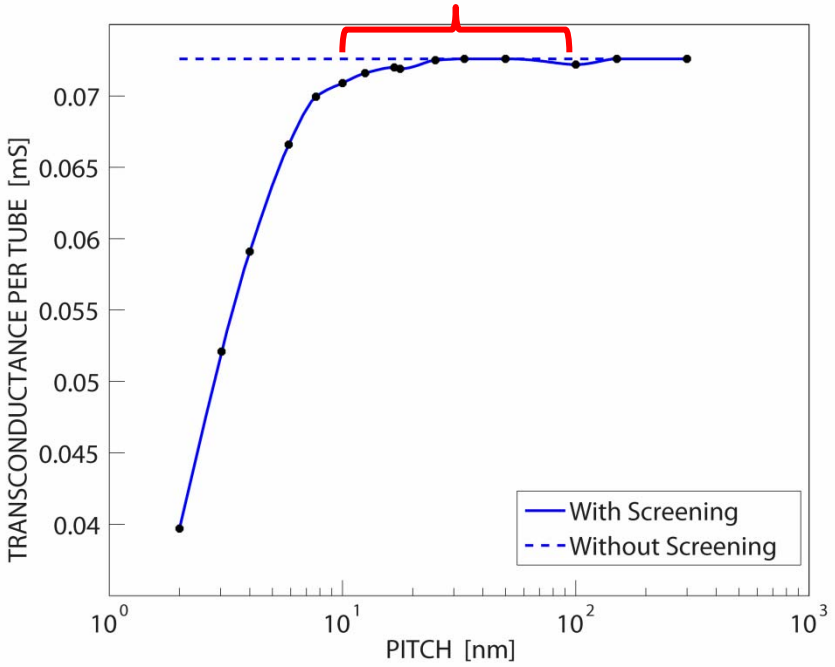

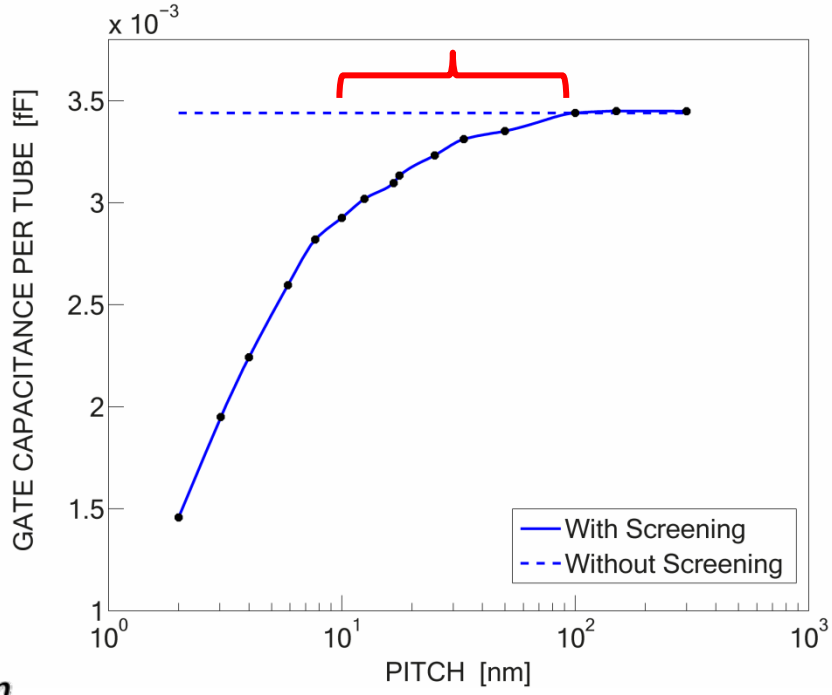

$$f_T = \frac{g_m}{2\pi C_{gg}}$$

Intrinsic Results III

- Point 2:

The screening effect is more pronounced in the structure with large gate oxide.

Case I: 50% improvement

Case II: 30% improvement

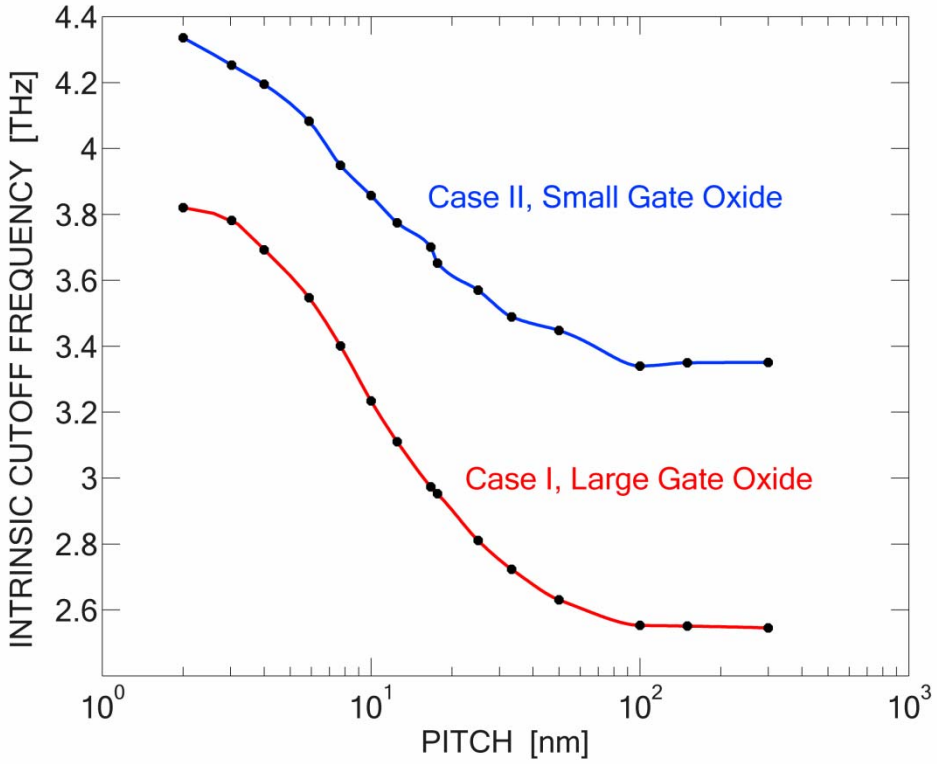

Extrinsic Results

- Parasitics dominate at large pitches.
- Small pitches overcome this effect.
- Increase in intrinsic f_T must also be taken into account.

High extrinsic f_T is attainable!

Small Gate Oxide (Case II)

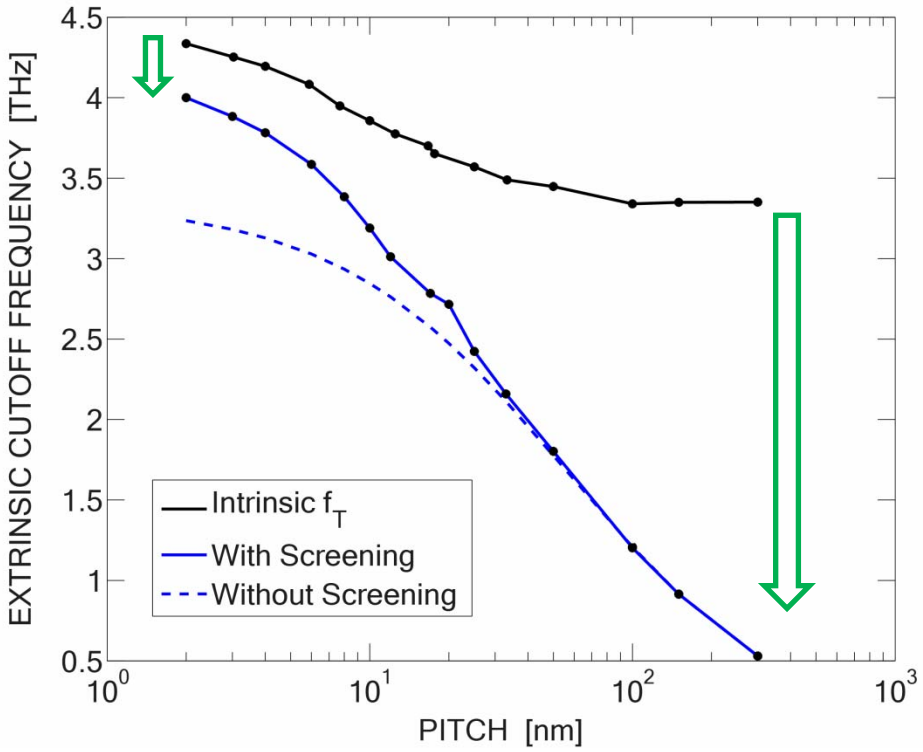

Promising RF Potential

Records of f_T for high-frequency transistors

	Array-Based CNFET [This Work]	Silicon MOSFET [Lee et al., IBM, 2007]	III-V HEMT [Kim et al., MIT, 2010]	Graphene Transistor [Liao et al., UCLA, 2010]	HBT [Hafez et al., Illinois, 2005]	ITRS RF CMOS [2015]
Channel Length or Emitter Width [nm]	20	29	30±2	140	35	20
f_T [GHz]	>1000	485	644	300	710	440

The future is promising!

Summary

- *Decreasing* the tube pitch in an array *increases* the screening effect, which helps to *increase* the transistor's f_T.
- RF performance (with parasitics included) compares favorably to other end-of-the-roadmap transistors.

Acknowledgments

- Alberta Ingenuity
- Alberta Advanced Education & Technology
- Natural Sciences and Engineering Research Council of Canada
- Profiling Alberta's Graduate Students Award

Future Work

- A more comprehensive investigation is underway that examines the RF potential of *realistic* array-based CNFET structures, including the impact of
  - Electron-phonon scattering
  - External parasitic resistance
- Look for these two journal publications soon:
  - N. Paydavosi, A. U. Alam, S. Ahmed, K. D. Holland, J. P. Rebstock,and M. Vaidyanathan, "RF performance potential of array-based, carbon-nanotube transistors—part I: intrinsic results," *IEEE Transactions on Electron Devices.*
  - N. Paydavosi, J. P. Rebstock,K. D. Holland, A. U. Alam, S. Ahmed, and M. Vaidyanathan, "RF performance potential of array-based, carbon-nanotube transistors—part II: extrinsic results," *IEEE Transactions on Electron Devices.*

Thanks for listening!